RG –AX8 (Female Thread) Bolt-in rollers for manual handling –BZP STEEL

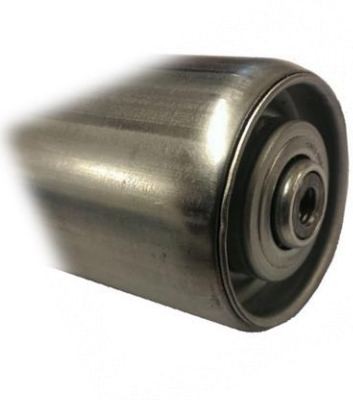

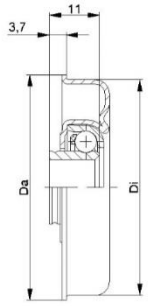

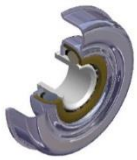

RG series are general purpose steel rollers with oiled free rolling bearings (cup & cone) for manual & gravity applications

Found in >	MATERIAL	TUBE EXTRAS
Manual Conveyors	Zinc Plated (BZP) tube Steel bearings & Steel axles	Rubber Sleeve
Despatch Areas		Bonded Rubber
Airports		Polyurethane
Packing Lines		

Roller Type	Roller Diameter & wall thickness	Female Thread available	Axle code Followed by thread	Bearing Type +Housing	Load Capacity†
RG-20*	Ø20 x1.5 wall	M5x10 (AX85) M6x12 (AX86)	AX85 / AX86	KTR20.01+**plastic**	3kgF udl
RG-30	Ø30 x1.5 wall	M6x12, M8x16 M10x20	AX86 / AX88 / AX810	MTR30.20+steel	25kgF udl
RG-40	Ø40 x1.5 wall	M6x12, M8x16 M10x20	AX86 / AX88 / AX810	MTR40.2+steel	50kgF udl
RG-50	Ø50x1.5 wall	M6x12, M8x16 M10x20	AX86 / AX88 / AX810	MTR50.2+steel	80kgF udl
RG-50MD	Ø51 x2 wall	M6x12, M8x16 M10x20	AX86 / AX88 / AX810	MTR50.2+steel	80kgF udl
RG-60	Ø60 x2 wall	M8x16 M10x20 M12x26	AX88 / AX810 / AX812	MTR60.2+steel	80kgF udl
RG-60MD	Ø60 x2 wall	M8x16 M10x20 M12x26	AX88 / AX810 / AX812	MTR60.3+steel	120kgF udl
RG-80	Ø80 x2 wall	M8x16 M10x20 M12x26	AX88 / AX810 / AX812	MTR80.2+steel	80kgF udl
RG-80MD	Ø80 x2 wall	M8x16 M10x20 M12x26	AX88 / AX810 / AX812	MTR80.3+steel	120kgF udl

IMPORTANT: *RG20 has plastic bearings †Load Capacity calculated on standard lengths. Please ask to confirm advisable load on quotation/order

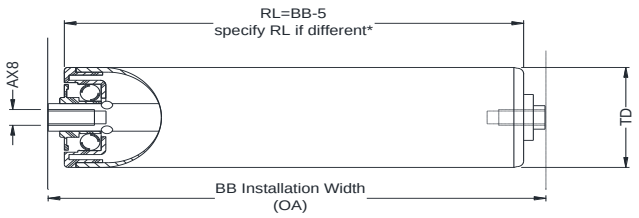

Roller Type (ie RG-50)	
Installation Width (BB)	
Female Thread size	
Quantity Required	
RL (Roller Length*)	
OA (over all axle length*)	
*leave blank if rollers are to suit installation width (BB)	

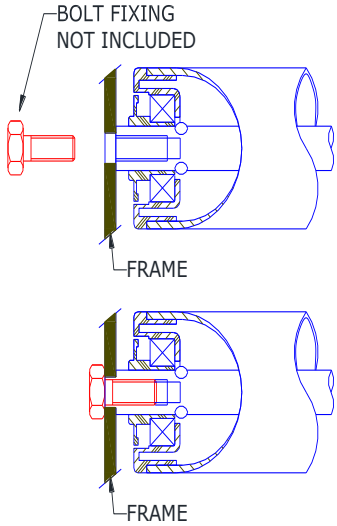

Company Name and address:-

Signed.....Print.....

Date: Purchase order No.....

Collect or Send by Carrier – circle as appropriate

Comments:

Please sign & return Order